THE FIBER NETWORK WITH THE BROADEST COVERAGE

CORPORATE PRESENTATION

axnet | AXTEL NETWORKS

V1.0 Public

YOUR INFRASTRUCTURE PARTNER

Axtel Networks is AXTEL's business unit specialized in Communications Infrastructure Solutions to satisfy the needs of mobile and fixed operators, data centers and Hyperscalers, as well as cloud and content providers.

We have created Axtel Networks with the objective of specializing our customer relationships and operations to become your expert ally in infrastructure capable of offering solutions that adapt to your specific requirements.

Our own fiber optic network and operating standards have allowed us to be recognized for the quality and reliability that we offer to our clients.

We provide world-class infrastructure solutions supported by our extensive metropolitan and long-distance fiber optic network, as well as our nationwide operational presence.

axnet | AXTEL NETWORKS

PREMIUM QUALITY WITH THE BROADEST COVERAGE

COVERAGE

- 100% own metropolitan fiber
- Metro network with high capillarity
- 72 cities
- More than 90% of A+/A Buildings and industrial Parks covered

QUALITY

- Own fiber optic network
- Network reliability
- Committed SLAs
- +20 years of operating experience

AGILITY

- Neutral Provider
- Digital Interaction (APIs MEF Compliant)
- Specialization in communications infrastructure
- Interdisciplinary customer care teams

WE CONNECT YOUR NETWORK & CUSTOMERS THROUGHOUT MEXICO

+47,300 km
Optical Fiber Network

+23,500 km
Metropolitan Rings

+23,800 km
Long Distance Network

5
International border crossings

+260,000
Business Locations Covered

72
Cities

1,000
Points of Presence in Network

7, 10.5, 15, 23, 38
Ghz Spectrum

axnet | AXTEL NETWORKS

VERY HIGH CAPILLARITY METRO NETWORKS

- 100% own metropolitan fiber
- Very wide coverage with high fiber density
- Covers the most important business areas
- Connecting companies, cell sites, and data centers with the highest quality.

+23,500 km

Metropolitan Rings

+85%

Medium & Large Business Locations Covered Nationwide

+90% covered

A+/A corporate buildings and industrial parks

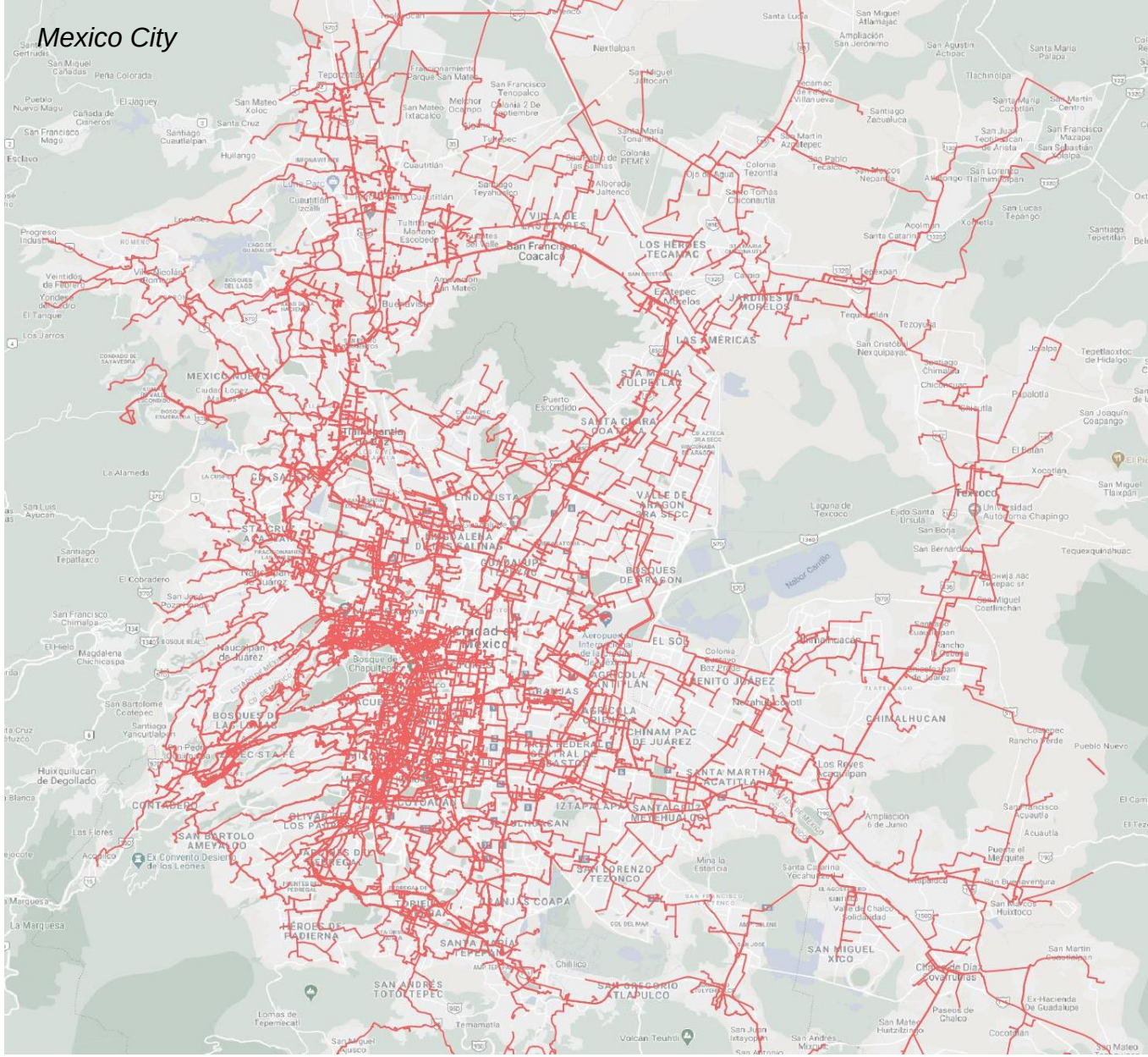

axnet | AXTEL NETWORKS

A SOLUTION FOR EVERY NEED

Fiber connectivity is key to grow your business. Our infrastructure lets you expand your network and services in a cost-efficient manner and focus on your highest value-added activities.

FIBER TO THE TOWER

Dark Fiber | Ethernet | Wavelength | Network POP

DATA CENTER CONNECT

Wavelength | Ethernet | Dark Fiber

LONG-HAUL TRANSPORT

Wavelength | Ethernet | Dark Fiber | Network POP

METRO ACCESS

Access E-Line | Ethernet | Wavelength

INTERNET

IP Transit | Dedicated Internet

COLLOCATION

Network POP | Data Center

SPECTRUM

axnet | AXTEL NETWORKS

CONNECTING DATA CENTERS, CLOUD, AND CUSTOMERS ECOSYSTEMS

Data Center to Data Center

Wavelength | Ethernet | Dark Fiber

- Connect your DC premises with high capacity & low latency n x 100 & n x 10 Gbps Wavelengths
- Robust metro rings assure very high availability for data center to data center connectivity
- Long-Haul rings offer diverse paths with multiple exits to the USA and LATAM

Fiber to the Data Center

Ethernet | Wavelength

- Connect your customers' end location with fiber
- Ethernet bandwidths up to 10 Gbps and Wavelengths for nx100 Gbps
- Broad metro network coverage and capillarity
- More than 260,000 business locations covered with fiber

Internet

IP Transit | Dedicated Internet

- Access our Internet Network with connectivity to multiple Tier 1 carriers across Mexico & USA
- Take advantage of our robust caching and peering infrastructure

Collocation Network POPs

Space | Power | XC | Tech Support

- More than 1,000 network points of presence where you can install edge computing infrastructure throughout Mexico
- Carrier- grade standards

axnet | AXTEL NETWORKS

QUERETARO
MEXICO'S TOP DATA CENTER CLUSTER

Axtel Networks fully redundant fiber optic ring allows to interconnect existing and new Data Centers providing n x 100 Gbps low latency optical transport as well as Carrier Ethernet to provide connectivity to end business locations

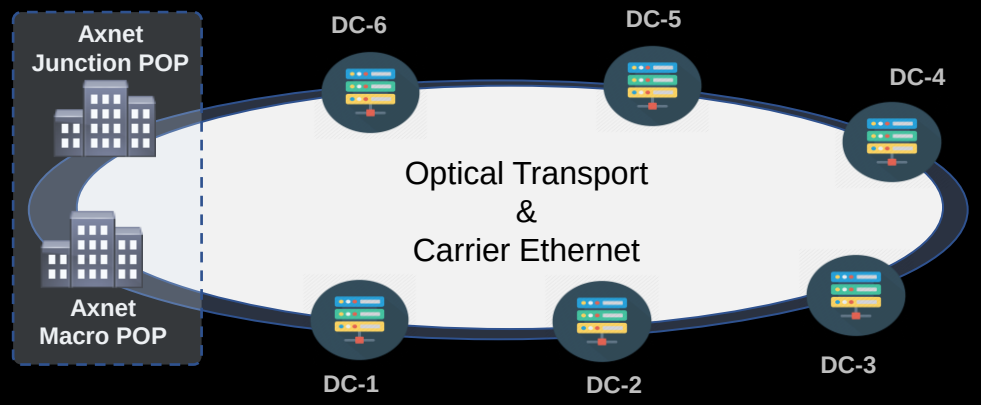

DATA CENTER CONNECT

Wavelength | Ethernet | Dark Fiber

- Own fiber with +80% buried
- Ring topology for full redundancy
- n x100 Gbps optical transport network

- 4 interconnection points to Long-Haul network
- 100 Mbps Carrier Ethernet
- IP Transit n x 100 Gbps

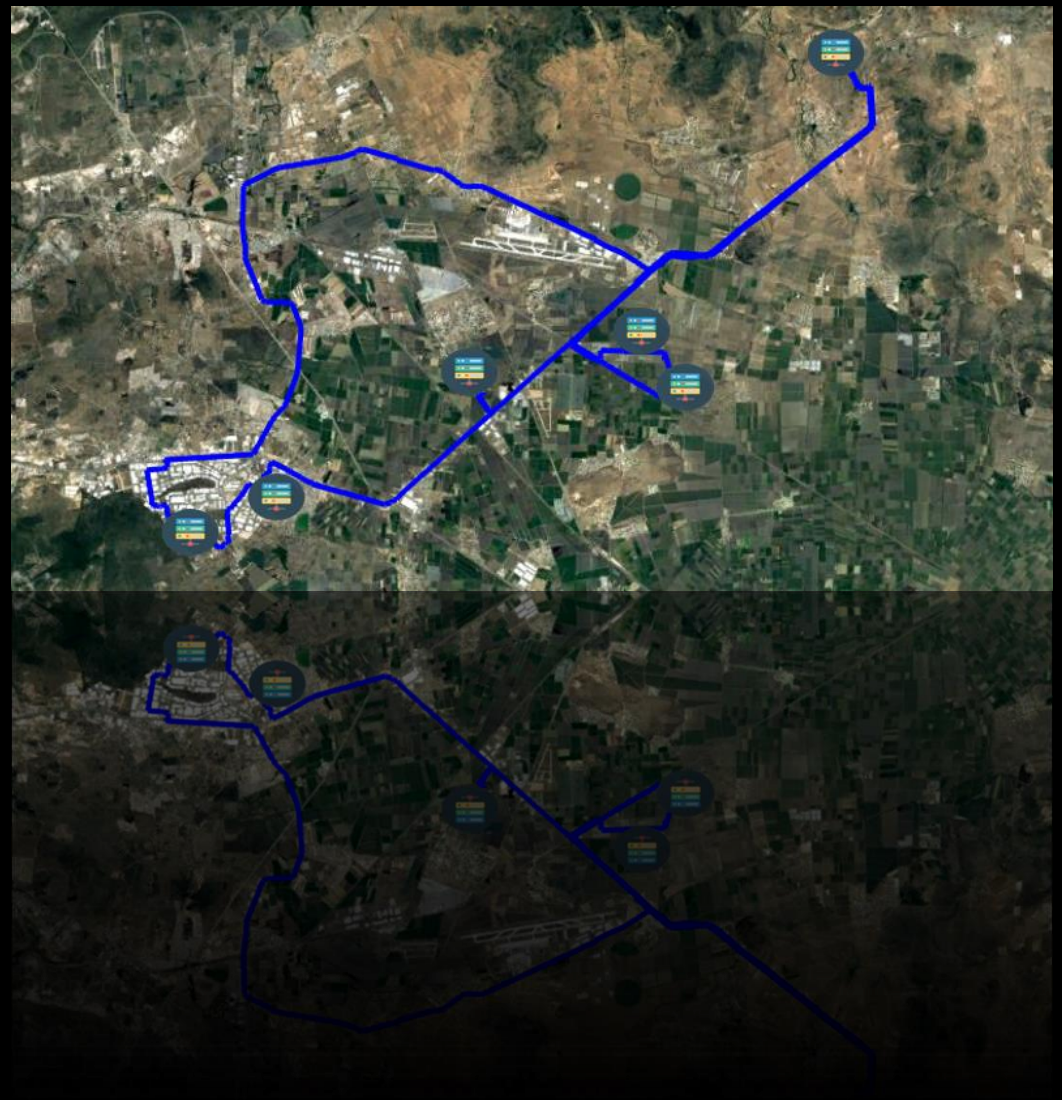

axnet | AXTEL NETWORKS

MEXICO CITY
DATA CENTER CONNECTIVITY

Mexico City's key Data Centers are interconnected through axnet's metropolitan rings with an optical transport layer that allows to provide n x 100 Gbps Wavelengths and Carrier Ethernet.

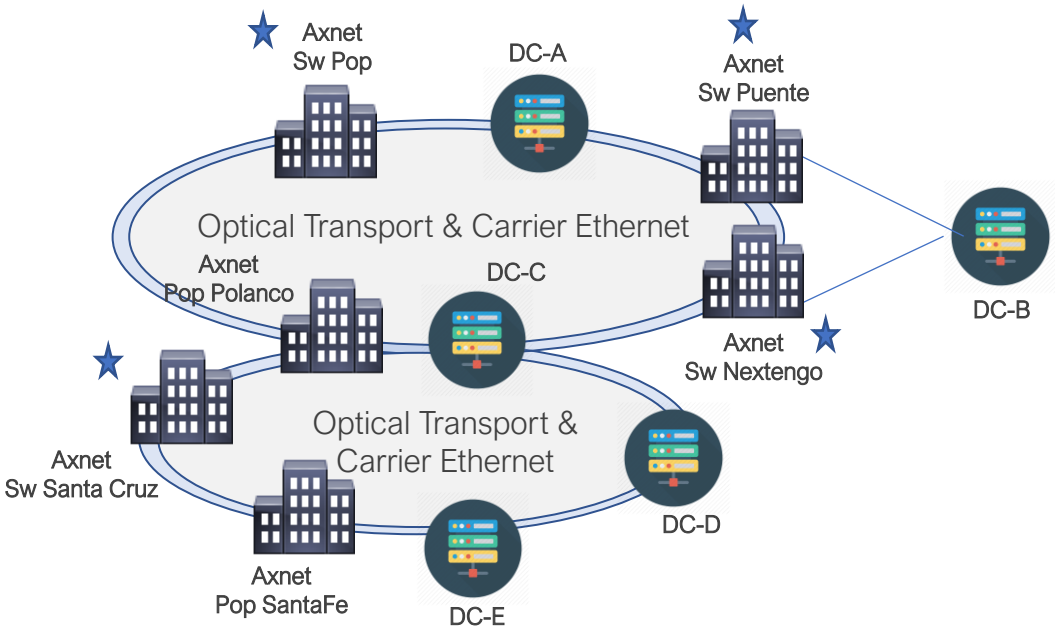

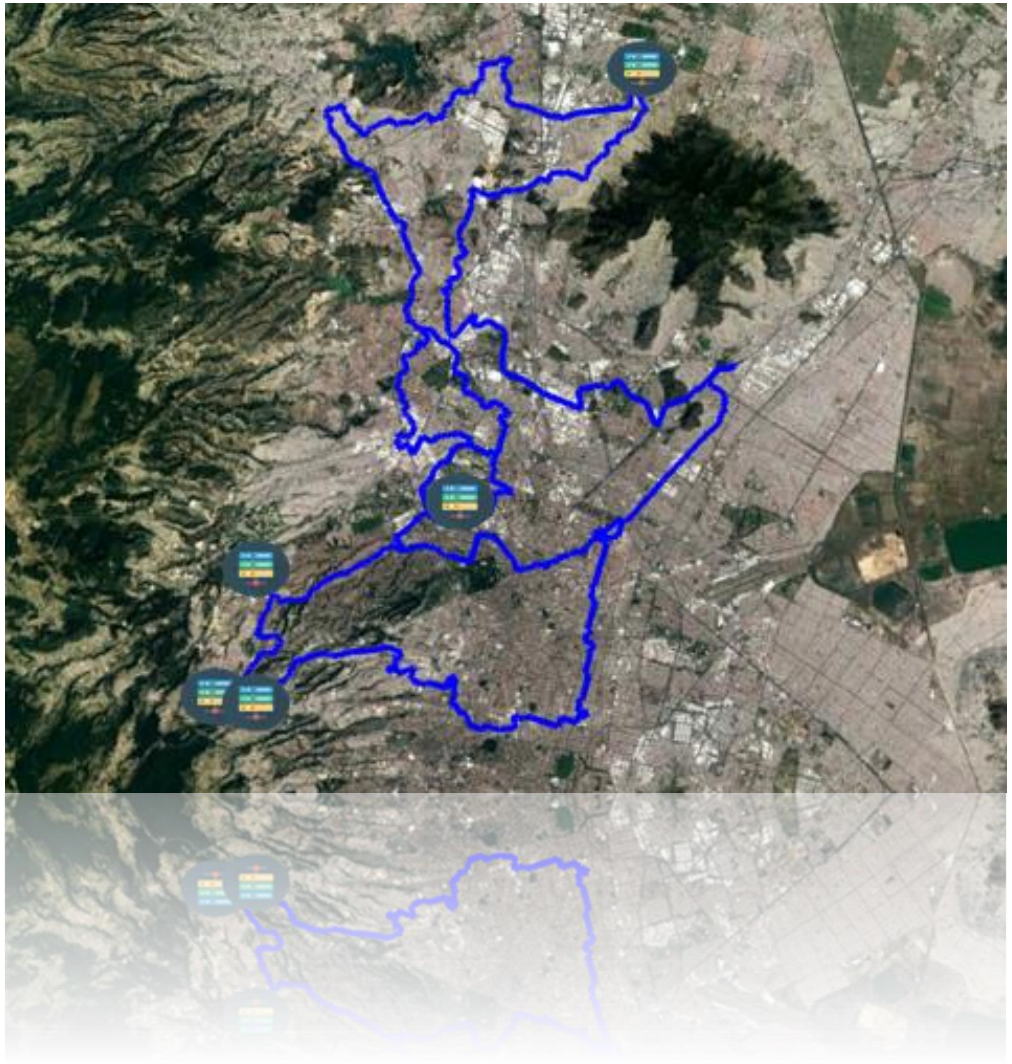

DATA CENTER CONNECT

Wavelength | Ethernet | Dark Fiber

- Ring topology for full redundancy
- n x100 Gbps optical transport network

- Carrier Ethernet
- IP Transit n x 100 Gbps

axnet | AXTEL NETWORKS

TRANSPORT YOUR DATA AT LIGHT SPEED

WAVELENGTH

Connect your Data Centers and Mission-Critical POPs with low latency and high capacity, taking advantage of the scalability and performance that our DWDM network can offer you.

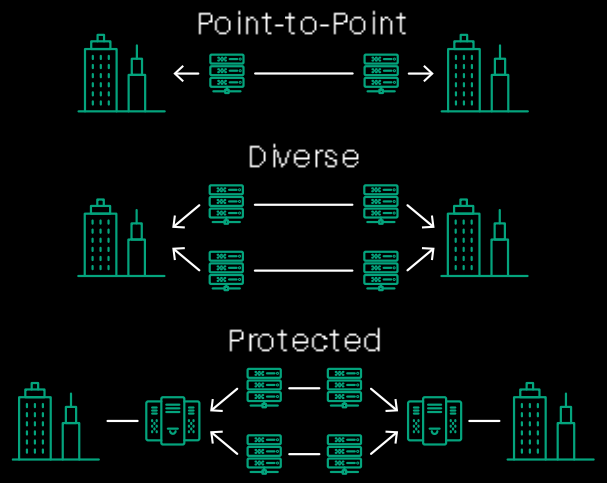

- High performance and low latency
- Fully managed solution
- +40 cities with Wavelengths with capacities up to nx100 Gbps
- From 10 Gbps to nx100 Gbps
- L1 Encryption (on request)

axnet | AXTEL NETWORKS

CONNECTING CLOUDS AND NETWORKS

ETHERNET

Expand your network and connect Customers to the Cloud with high performance and security. Designed under MEF standards, our Ethernet service is available in flexible and scalable bandwidths according to your needs.

E-Line

Point-to-Point connection between
Offices, data centers or POPs

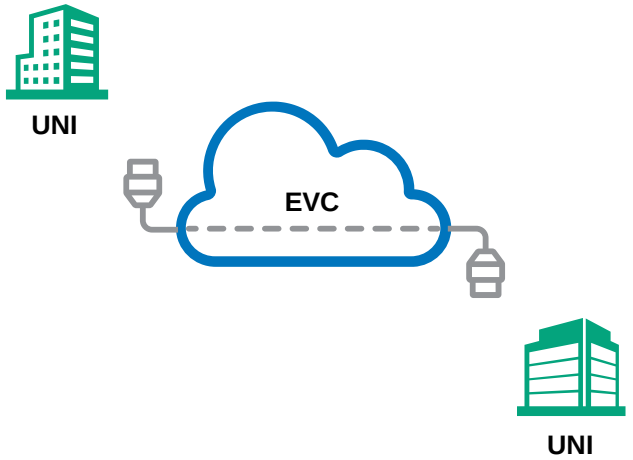

E-LAN

Multipoint to Multipoint service to connect
Various end points with full mesh connectivity

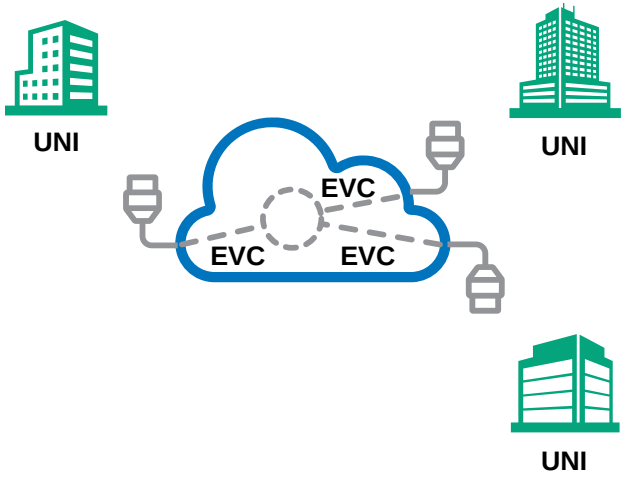

- Layer 2 “best-in-class” E-Line & E-LAN services
- Efficient and fully restorable network
- From 10 Mbps to 10 Gbps
- Flexibility to increase bandwidth and sites

EVC: Ethernet Virtual Connection
UNI: User Network Interface

GET TO YOUR CUSTOMERS

ACCESS E-LINE

Deliver top-quality services through Axtel Networks fiber. Connect your customer with high performance, flexibility, and scalability that adapts to his changing needs.

Access E-Line

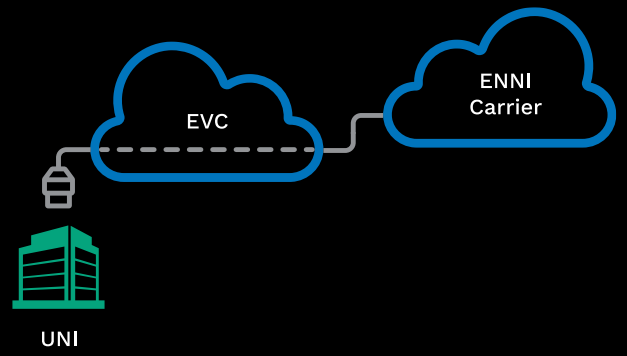

- More than 260,000 business locations with fiber coverage
- Interconnects end customer with ENNI
- Efficient and fully restorable network
- From 10 Mbps to 10 Gbps
- Based on MEF standard
- + 90% Buildings A / C +
- + 90% Industrial Parks

axnet | AXTEL NETWORKS

JOIN THE GLOBAL INTERNET

INTERNET

High performance Internet is critical. Our network with connectivity to multiple Tier 1 operators in Mexico and the US, along with our peering and caching infrastructure, offers the best solution.

IP TRANSIT

- High performance Internet delivered over Axtel Networks fiber
- +30 international connection points in various cities
- Capacity +350 Gbps
- Peering interconnections & Caches
- From 1 Gbps to 100 Gbps

DEDICATED INTERNET

- Dedicated internet for your end customers
- From 10 Mbps to 10 Gbps

IP Network

- IP MPLS Core with Cisco technology
- IPv6 ready.
- National Peering with all mayor carriers in México.
- Caching with mayor OTTs.
- Two Autonomous Systems for Multihomed customers in Internet.

axnet | AXTEL NETWORKS

COLOCATION

ENABLE YOUR EDGE COMPUTING ECOSYSTEMS

NETWORK POP COLLOCATION

Enable your Edge infrastructure with more than 1,000 points of presence in Mexico. We offer you the flexibility and coverage you need.

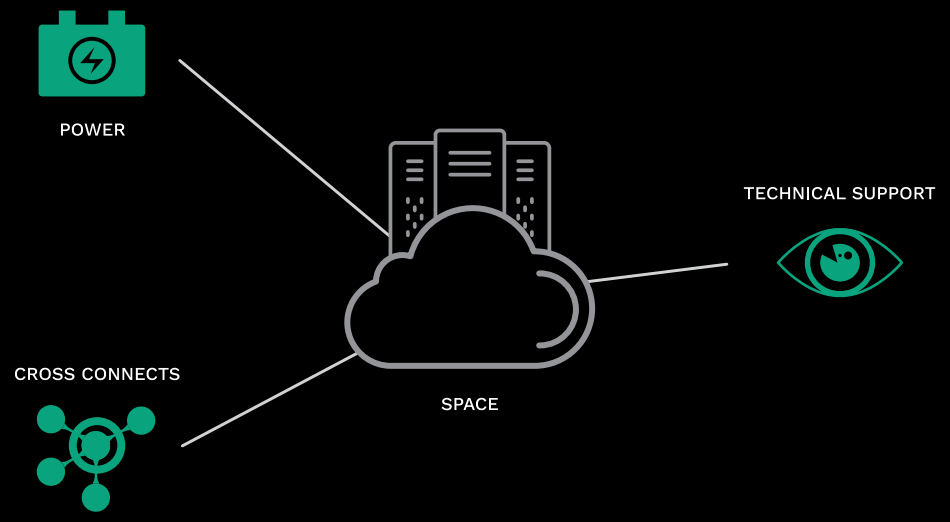

DATA CENTER COLLOCATION

Deploy your mission critical infrastructure with the highest standards of security and availability in Axtel Networks Data Centers.

axnet | AXTEL NETWORKS

AGILE DIGITAL INTERACTIONS

Understanding the new requirements of customers and carriers around the globe and as part of our digital transformation journey, we have implemented our business-to-business digital interactions platform based on MEF LSO Sonata APIs.

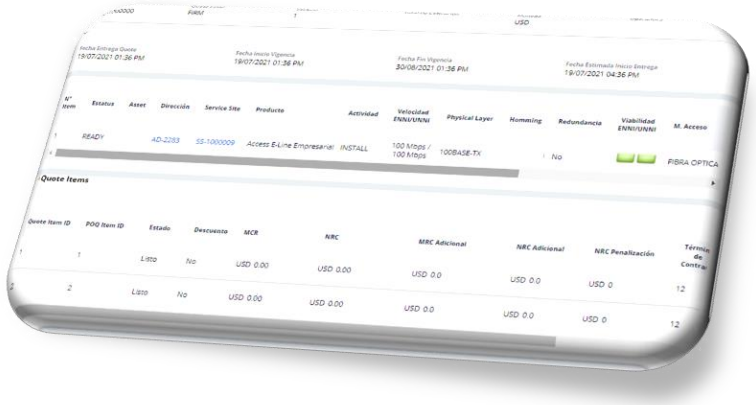

- Address Validation
- Site Serviceability
- Product Offering Qualification
- Quote
- Order

Available for Access E-Line | Real time response | MEF LSO Sonata based APIs

Producto	Actividad	Velocidad ENNI/UNNI	Physical Layer	Homming	Redundancia	Viabilidad ENNI/UNNI	M. Acceso
Access E-Line Empresarial	INSTALL	100 Mbps / 100 Mbps	100BASE-TX	MXCYXMAU	No		FIBRA OPTICA

axnet | AXTEL NETWORKS

ASSURING QUALITY

KPI's

- Customer Experience
- Incident Response
- Infrastructure Stability
- Proactivity
- Infrastructure Reliability

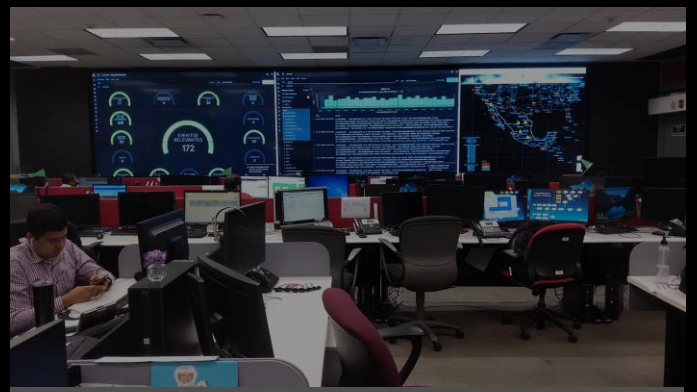

NOC: Centralized Operations

Field Network Operations

- Nation-wide infrastructure monitoring platform.
- Fully integrated next generation OSS's
- 24x7 coverage
- Multivendor operation
- e-TOM & ITIL based operation model (Fault Management, Change Management, Performance Management)
- ISO 9000 certified
- Preventive maintenance and field patrol routines
- 151 warehouse with tools and spares
- Agreements with authorities and other service providers

axnet | AXTEL NETWORKS

axnet | AXTEL NETWORKS